FUJIFILM

DRYPIX 5000/7000

Quality Control for Mammography

OPERATION MANUAL

First Edition

March 2005

MADE IN JAPAN

FUJI PHOTO FILM CO., LTD.

TOKYO 106-8620

897N0370 03.2005

FOREWORD

The present document, DRYPIX 5000/7000 “Quality Control for Mammography” Operation Manual, describes how to confirm and verify that the Fuji dry laser imager system is working in a consistent manner according to the specifications for use with Full Field Digital Mammography (FFDM) systems. After using the manual, keep it nearby for future reference.

CAUTIONS

1. No part or all of this manual may be reproduced in any form without prior permission.
2. The information contained in this manual may be subject to change without prior notice.
3. Fuji Photo Film shall not be liable for malfunctions and damages resulting from installation, relocation, remodeling, maintenance, and repair performance by other than dealers specified by Fuji Photo Film.
4. Fuji Photo Film shall not be liable for malfunctions and damages of Fuji Photo Film products due to products of other manufacturers not supplied by Fuji Photo Film.
5. Fuji Photo Film shall not be liable for malfunctions and damages resulting from remodeling, maintenance, and repair using repair parts other than those specified by Fuji Photo Film.
6. Fuji Photo Film shall not be liable for malfunctions and damages resulting from negligence of precautions and operating methods contained in this manual.
7. Fuji Photo Film shall not be liable for malfunctions and damages resulting from use under environment conditions outside the range of using conditions for this product such as power supply, installation environment, etc. contained in this manual.
8. Fuji Photo Film shall not be liable for malfunctions and damages resulting from natural disasters such as fires, earthquakes, floods, lightning, etc.

Copyright Reserved
<Reprint and/or reproduction of part or all of this manual is prohibited.>
FCR® is a registered trademark of Fuji Photo Film Co., Ltd.
Copyright© 2005 by Fuji Photo Film Co., Ltd.

1 Objective

To confirm and verify that the Fuji dry laser imager system is working in a consistent manner according to the specifications for use with Full Field Digital Mammography (FFDM) systems.

2 Frequency

Weekly - Density Constancy
Annual - Mechanical (sound, film transportation)
- Artifacts
- Geometry
- Resolution Setting

NOTE

FUJIFILM Medical Systems Field Service Engineer or qualified and trained personnel shall conduct annual tests.

3 Weekly Quality Control

Perform at the beginning of the working week before processing any clinical films.

● With DRYPIX 5000 and 7000

Test	Contents
Density	Output test pattern films to measure the densities.

3.1 Required Test Equipment

Integrated 17-step test pattern
Calibrated external densitometer*
Control chart

* Densitometer should be calibrated using the manufacturer's recommended procedure and frequency.

3.2 Procedure

(1) Generate a 17-step test pattern in User Utility for each film tray used for mammography.

NOTE

The following path accesses the 17-step test pattern: UserUtility/Test Pattern/17 Steps/Tray Selection.

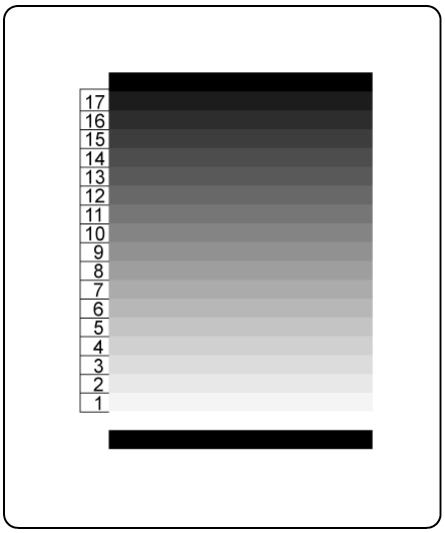

(2) Measure the densities of the following steps from the same film side using the calibrated external densitometer:

Step 1 (Base + Fog)
Step 5
Step 10
Step 15

(3) Record numerical density values of Steps 1, 5, 10, and 15 as well as date and Printer ID on the film.

(4) Plot the numerical values of the Steps 1 (B+F), 5, 10 and 15 on the appropriate areas of the control chart.

Control limit :	
Step 1	<or = 0.23
Step 5	0.48 ± 0.07
Step 10	1.38 ± 0.10
Step 15	2.40 ± 0.15

(5) Determine if any of the data points exceed the control limits. If so, circle the out of control data points, correct the cause of the problem (refer to the Performance and Corrective Action section of this document) and repeat the test. Note the cause of the problem in the “Maintenance/Corrective Action Log” section on the back of the control chart, and plot the corrected in control data point.

(6) Determine if there are any trends, i.e., three or more data points moving in one direction (either upwards or downwards). If trends are present but the data points have not, as yet, exceeded the control limits, it is good practice to perform a calibration procedure “Auto FDC” and confirm the correction with a 17-step test pattern film.

NOTE

The measured density steps should be similar to the Fuji recommended values. Some variation from the published values may be caused by slight differences between the measurements of the internal printer densitometer and the external densitometer used at the site. The measured density steps should not exceed the range listed above.

3.3 Precautions and Caveats

It is essential that 17-step test pattern films be printed, and the data evaluated weekly. If problems are detected, corrective action must be taken before clinical films are processed under less than optimal conditions.

Film is produced in batches. There may be slight variations in the characteristics of the film between batches. In addition, film aging and storage conditions can also affect the sensitometric characteristics of the film. The DRYPIX 5000 and 7000 printers shall be set up to perform an Automatic Film Density Calibration (Auto FDC) whenever a new emulsion batch of film is installed.

If Step 1 (B+F) exceeds the old film by greater than 0.03, the cause of the increase should be investigated and storage conditions checked.

3.4 Performance and Corrective Action

If the numerical densities of Steps 5, 10 and 15 do not exceed the tolerance levels stated above and Step 1 (Base + Fog) is below 0.23 and within ± 0.03 of its operating level, the printer is in control, no further action is required.

If the numerical density levels of any of the Steps fall outside the above control limits, corrective action using the “Auto FDC” function should be performed and the density should be confirmed by printing a 17-step test pattern and repeating the density measurements. If “Auto FDC” does not return the system to its normal operating range after several tries, contact service. The source of the problem must be corrected before any mammographic images are printed.

NOTE

Imager QC charts should be retained in the QC Records for one year. 17-step test pattern films for the last three months’ QC chart should be retained.

DRYPIX

FUJI DRYPIX DRY LASER IMAGER QUALITY ASSURANCE CHART

Facility: _____ Densitometer ID: _____

Printer Model: _____ Serial No.: _____ Film Type: _____

Year: _____ Beginning Date: _____ **Note: Frequency is WEEKLY**

Week	1	2	3	4	5	6	7	8	9	10	11	12	13	14	15	16	17	18	19	20	21	22	23	24	25	26
Month																										
Date																										
Tech Initials																										

Step 15

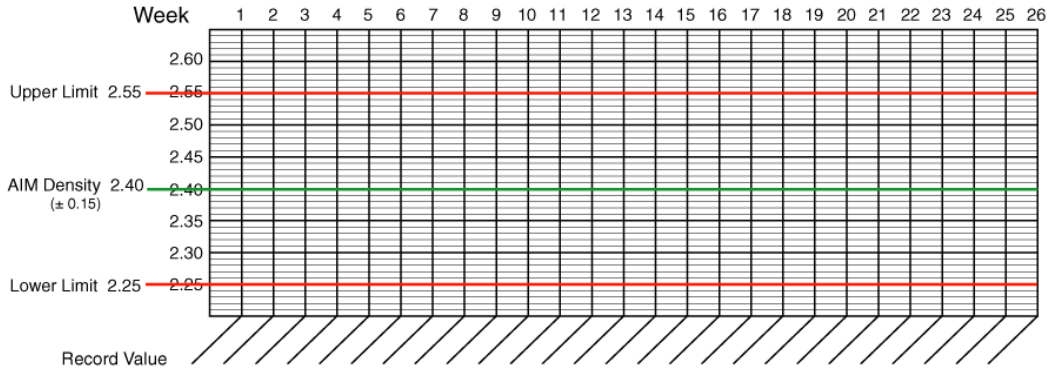

Step 10

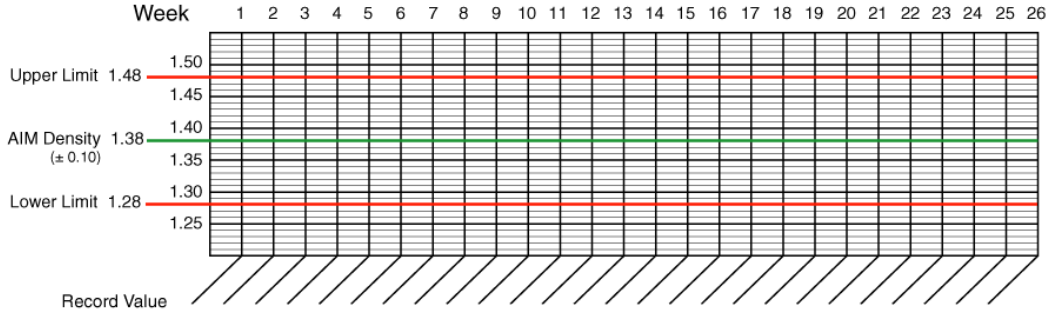

Step 5

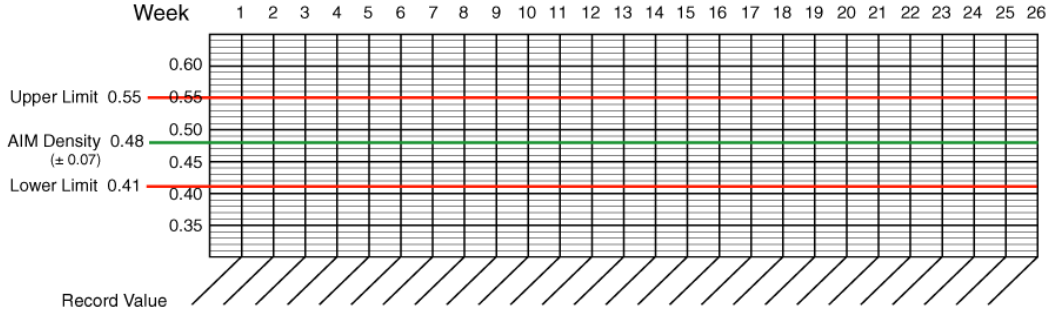

Step 1

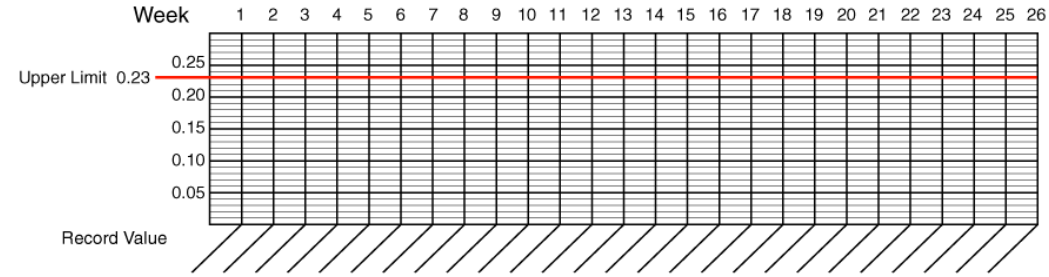

FUJIFILM

Maintenance / Corrective Action Log

Date	Problem	Corrective Action	Initials

DRYPIX

FUJI DRYPIX DRY LASER IMAGER QUALITY ASSURANCE CHART

Facility: _____ Densitometer ID: _____

Printer Model: _____ Serial No.: _____ Film Type: _____

Year: _____ Beginning Date: _____ **Note: Frequency is WEEKLY**

Week	27	28	29	30	31	32	33	34	35	36	37	38	39	40	41	42	43	44	45	46	47	48	49	50	51	52
Month																										
Date																										
Tech Initials																										

Step 15

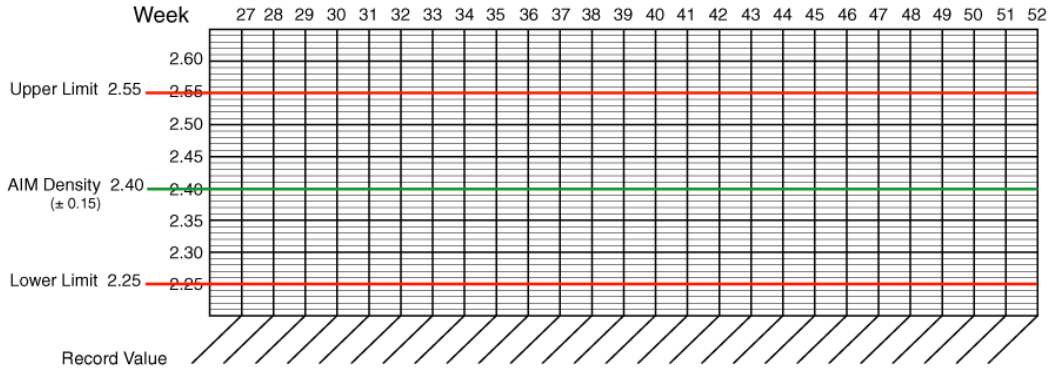

Step 10

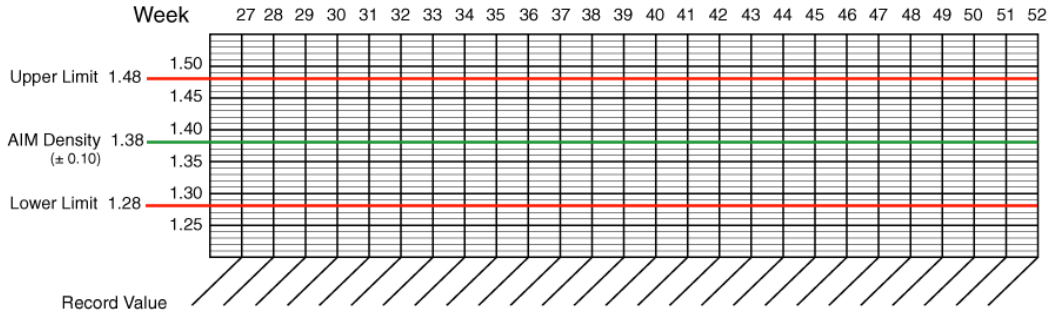

Step 5

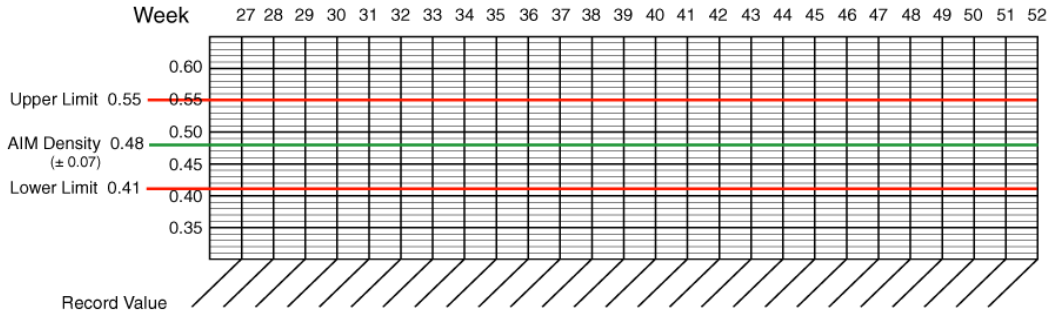

Step 1

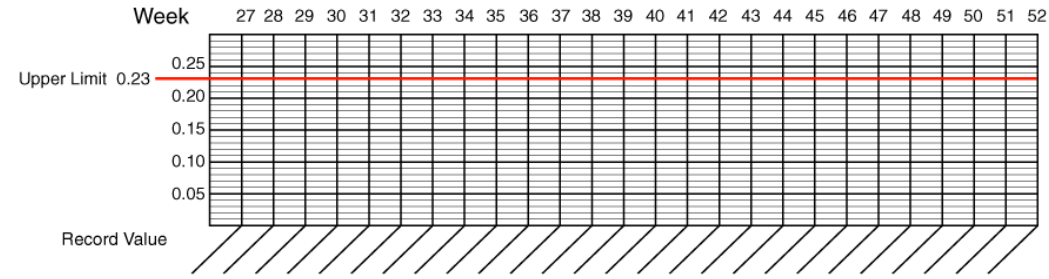

FUJIFILM

Maintenance / Corrective Action Log

Date	Problem	Corrective Action	Initials

4 Annual Quality Control

A FUJIFILM Medical Systems Field Service Engineer or qualified and trained personnel shall carry out the annual check of the dry laser imager.

Test	Contents
Mechanical	Output test pattern films to make sure that there are no mechanical transportation errors or abnormal sounds.
Artifacts	Output test pattern films to make sure that there are no clinically significant artifacts, such as banding, scratch, fog etc.
Geometry	Output test pattern films and measure the specified horizontal and vertical length to confirm it is within specifications.
Resolution setting	Make sure that the image recording resolution setting has been set to “High Resolution” for Mammography Imaging.

Image Format Report Form

Imager	Model: ☐ DRYPIX 5000 ☐ DRYPIX 7000	Serial No.:
Installation Site		
Inspected by:		Inspected on:

	Tray 1	Tray 2	Tray 3
1. Mechanical (Jamming, Abnormal Sound)	☐ Pass ☐ Fail	☐ Pass ☐ Fail	☐ Pass ☐ Fail
2. Artifacts (Banding, Scratch, Fog, etc.)	☐ Pass ☐ Fail	☐ Pass ☐ Fail	☐ Pass ☐ Fail
3. Geometry (Recording Length and Width)	☐ Pass ☐ Fail	☐ Pass ☐ Fail	☐ Pass ☐ Fail
4. Image recording resolution setting checks	☐ The Fine AE title is the same as that of the modality.		
	☐ The device output setting is Fine Resolution.		

Geometry Report Form

	Tray 1	Tray 2	Tray 3
FILM SIZE			
H	☐ Pass ☐ Fail	☐ Pass ☐ Fail	☐ Pass ☐ Fail
J	☐ Pass ☐ Fail	☐ Pass ☐ Fail	☐ Pass ☐ Fail
			☐ Pass ☐ Fail

	10X14 in (26X36 cm)	8X10 in (20X25cm)	10x12 in (25X30cm)
H	300 ± 3	100 ± 1	201 ± 2
J	200 ± 2	200 ± 2	200 ± 2

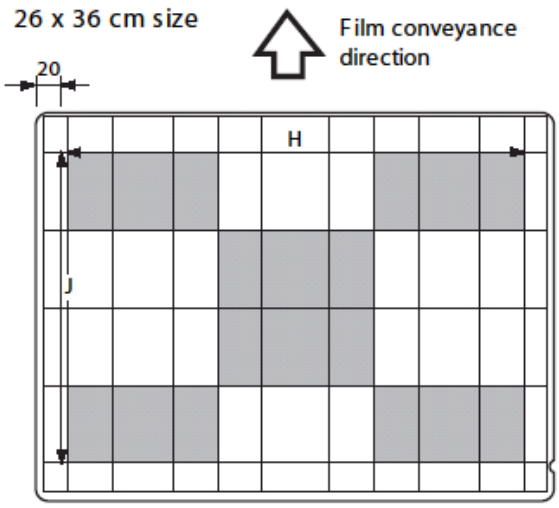

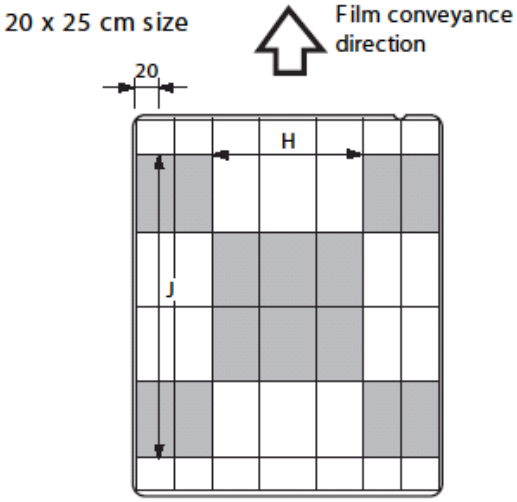

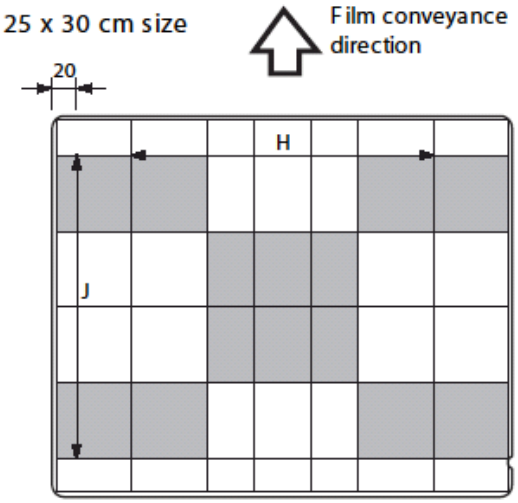

(Unit: mm)

Position	26 x 36 cm size	20 x 25 cm size	25 x 30 cm size
H	300 ± 3	100 ± 1	201 ± 2
J	200 ± 2	200 ± 2	200 ± 2

FUJIFILM MEDICAL SYSTEMS U.S.A., INC.
419 WEST AVENUE, STAMFORD CT 06902, U.S.A.

897N0370 03.2005